INGENIUS®
INNOVATION WATER SYSTEM

IG1001R - IG101E

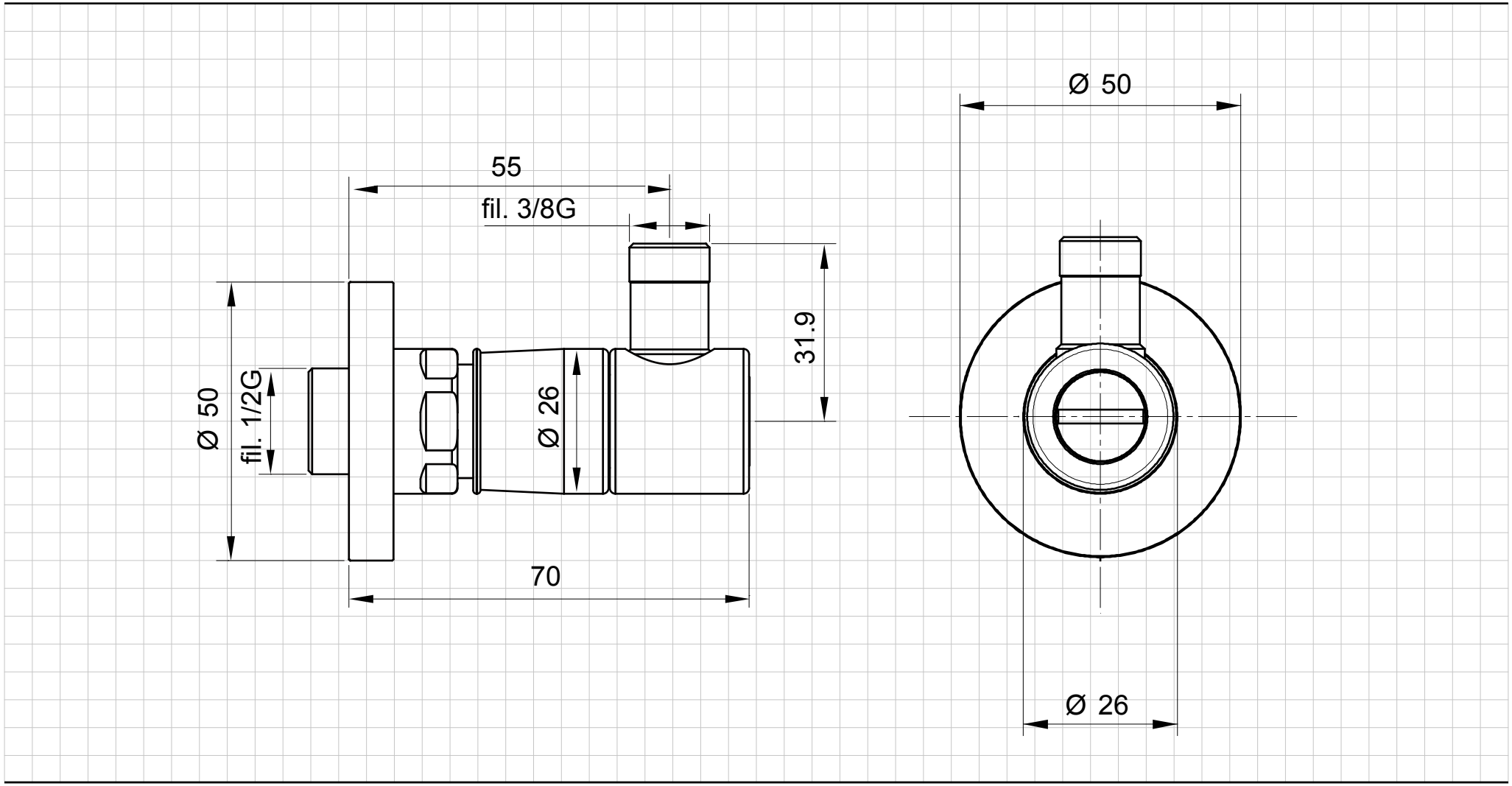

100% MADE IN ITALY
SG.Srl - Via Roma 135/B - 28017 San Maurizio D'Opaglio (NO) Italia - tel. (+39) 0322 967249 - fax. (+39) 0322 950877 - info@sistemaingenius.it